PHOTON KINETICS

2302 Coating Geometry System

Compact, precise characterization for R&D, post-draw and final QC

Features

Dark Field Measurement Technique

- Measurement cell LEDs backilluminate coated fiber, and dark field images are captured at user-defined rotational angles.
- Images are used to reconstruct the 2-D geometry of the glass cladding, and all coating layers.
- Interchangeable measurement cells available for fibers having coating outside diameters from 130 to 650 µm.
- Option available for characterization of fibers having ultra-thin coating layers.

Fast Fiber Prep, Loading and Measurement

- Characterizations performed on short samples cut either directly from spool, or from previosly measured 2-meter cut-back/cut-off/geometry sample.
- Loose fiber stage option enables characterization of samples not mounted in a fiber holder.
- Fully-automated alignment and rapid data acquisition allow fibers to be characterized in less than 20 seconds.

Stand-alone System or Add-on Option

- Internal illumination allows the 2302 module to be deployed as a stand-alone measurement system, or as an add-on option to any 2300 Fiber Analysis System.

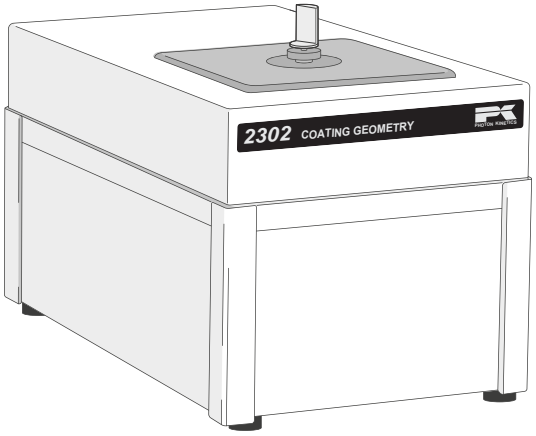

Coating Geometry

For more information contact
sales@pkinetics.com

Specifications

Measurement	
Compatible Fibers	Nominal coating OD ≤ 600 µm
Standards and Methods	IEC 60793-1-21, Method A, Side View Light Distribution
Performance	
Repeatability [1]	
Coating Layer Diameter (µm)	< 0.5
Coating Layer Non-circularity (µm)	< 0.5
Cladding/Coating Concentricity (%)	< 0.5
Measurement Time (s)	< 20, typical
Configurations	
Available Measurement Cells	2302-C180 Coating Geometry Cell - 180 µm 2302-C250 Coating Geometry Cell - 250 µm 2302-C300 Coating Geometry Cell - 300 µm 2302-C400 Coating Geometry Cell - 400 µm 2302-C500 Coating Geometry Cell - 500 µm 2302-C600 Coating Geometry Cell - 600 µm
Physical and Environmental [2]	
Dimensions	10.25 in W x 11.5 in H x 18.0 in D 26.0 cm W x 29.2 cm H x 40.6 cm D
Weight	24.0 lbs (10.9 kg)
Power	100-240 V ac, 2.5 A max., 50/60 Hz
Temperature (°C)	
Operating	10 to 30
Storage	0 to 50
Humidity	< 80% RH, non-condensing

Notes:
1. *7 rotational angles, one image per angle, 1-sigma.*
2. *One measurement cell included with system (2302-C250 standard). Additional available as options.*

Photon Kinetics, Inc.
9305 SW Gemini Drive Beaverton, OR 97008 USA
Tel +1 503 644 1960

ISO 9001:2015 certified. Printed in USA.
Specifications subject to change without notice

pkinetics.com

90-1189-01 Rev A
©2026 Photon Kinetics. All rights reserved